Gas Burner Controls LGB...

ISO 9001

The LGB... are designed for use with gas burners of small to medium capacity, with or without auxiliary fan, in intermittent operation*.

The gas burner controls are tested to EN298 and CE certified in compliance with the directives for gas-fired appliances and electromagnetic compatibility.

* For safety reasons (self-test of flame supervision circuit, etc.), at least one controlled shutdown must take place every 24 hours.

Use

The burner controls LGB... are used for the startup and supervision of single- or two-stage gas or gas / oil burners having a capacity of up to 350 kW in intermittent operation. The flame is supervised with either an ionization current detector electrode, a blue flame detector QRC1... for forced draught gas / oil burners, or a UV detector QRA... (with auxiliary unit AGQ1...), depending on the type of burner control used.

When used with the appropriate adapters, these burner controls replace their predecessors LFI7..., LFM1... and LFD... in terms of function and size (please also refer to «Replacement types» under «Ordering»). Other application-related features:

– Detection of undervoltages in compliance with the respective standards
– Air pressure supervision with functional check of the air pressure monitor during startup and operation
– Possibility of electrical remote reset
– Burner controls LGB41... for use with atmospheric gas burners

Type summary

The type references contained in the following table refer to burner controls with **no** base and with **no** flame detector. For ordering information on bases and other accessories, please refer to «Mechanical design» through «Flame supervision with UV detector QRA... and auxiliary unit AGQ... for LGB21.../ 22.../ 41...».

Flame detector	Type reference	Approved in:	tw/s ca.	t1/s min.	t2/s max.	t3n/s ca.	t3/s ca.	t4/s ca.	t5/s 9) max.	t10/s min.	t11/s 3) max.	t12/s 3) max.	t20/s ca.
Burner controls with air damper control for pre-purging with **low flame air volume**													
Detector electrode (FE) or UV detector QRA...	**LGB21.130A27** 4)7)	CH, EU, S, SF	8	7	3	2.4	2	8	-	5	-	-	6
	LGB21.230A27 5)	CH, EU, S, SF	8	15	3	2.4	2	8	-	5	-	-	38
	LGB21.330A27 5)	CH, EU, H, S, SF	8	30	3	2.4	2	8	-	5	-	-	23
	LGB21.350A27 5)7)	CH, EU, H, S, SF	8	30	5	4	2	10	-	5	-	-	21
	LGB21.550A27 5)	AUS, CH, EU	8	50	5	4	2	10	-	5	-	-	2
Burner controls with air damper control for pre-purging with **rated air volume**													
Detector electrode (FE) or UV detector QRA...	**LGB22.130A27** 4)	CH, EU, N, S	9	7	3	2.4	3	8	-	3	12	12	21
	LGB22.230B27 5)	CH, U, N, S, SF	9	20	3	2.4	3	8	-	3	16.5	16.5	2
	LGB22.330A27 5)7)	AUS, CH, EU, H, N, S, SF	9	30	3	2.4	3	8	-	3	12	11	2
	LGB22.330A270 5)8)	EU	9	30	3	2.4	3	8	-	3	12	11	2
Blue flame detector QRC1...	**LGB32.130A27** 4)10)	CH, EU	9	7	3	2.4	3	8	-	3	12	12	21
	LGB32.230A27 5)10)	CH, EU	9	20	3	2.4	3	8	-	3	16.5	16.5	2
	LGB32.330A27 5)7)	CH, EU	9	30	3	2.4	3	8	-	3	12	11	2
	LGB32.350A27 5)7)	CH, EU	9	30	5	4.4	1	10	-	3	12	9	2
Burner controle for atmospheric burners													
Detector electrode (FE) or UV detector QRA...	**LGB41.258A27** 2)5)7)	CH, EU, H SF	18	-	5	4	2	10	9	-	-	-	10

Legend

tw	Waiting time
t1	Checked pre-purge time
t2	Safety time
t3n	Post-ignition time
t3	Pre-ignition time
t4	Interval BV1-BV2 or BV1-LR
t5	Second safety time (only with LGB41...)
t10	Specified time for air pressure signal
t11	Programmed time for opening actuator SA
t12	Programmed time for closing actuator SA
t20	Interval up to self-shutdown of the programming mechanism

2) For atmospheric burners up to 120 kW

3) Maximum running time provided for the air damper actuator

4) Also for flash steam generators

5) Also for stationary direct fired air heaters

7) Also available for 100...110 V; in that case, the last two digits read ...17 in place of ...27

8) Without integral microfuse. Use only in connection with a base AGK86... or with an external microfuse of 6.3 A slow!

9) t5 + reaction time of flame relay

10) On request

LGB21...

Burner controls for single- or two-stage forced draught burners.
Air damper control for pre-purging with **low flame air volume.**

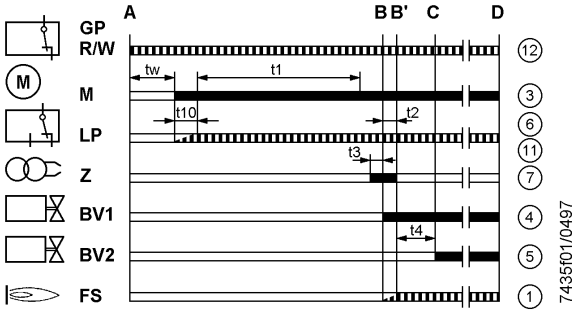

Connection examples

Air damper control of two-stage or two-stage modulating burners.
Pre-purge (t1) with low flame air volume. Exactly the same low flame air damper position (cam III) during startup and operation!

For detailed information about the air damper actuators, please refer to the following data sheets:

SQN30...: data sheet 7808
SQN90.../ 91...: data sheet 7806

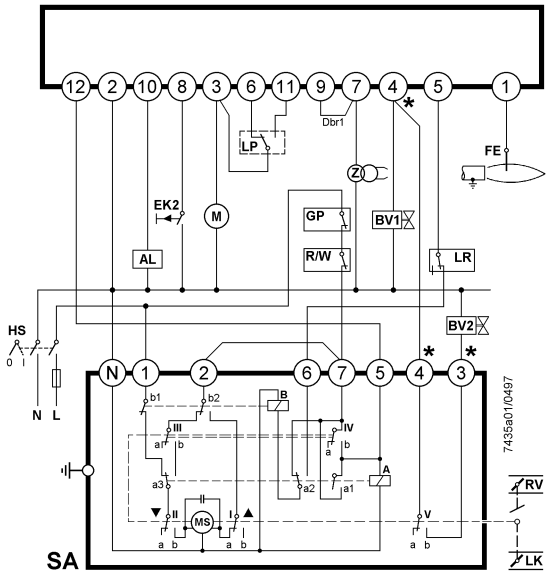

SQN3...121...
* **Note:** in the case of two-stage modulating burners (with gas regulation damper RV) BV2 and the connection between the terminals marked (*) in the diagram are not required.

Burner without fan and **without LP**

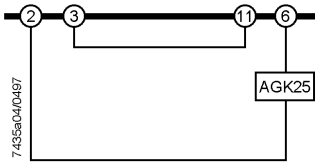

Burner with fan control via auxiliary contactor (HS) **with LP**
Not valid for LGB41...

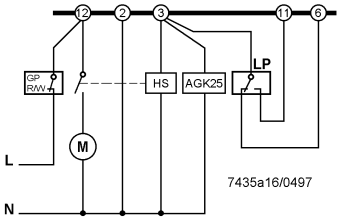

Flame supervision

LGB21...: with detector electrode or with auxiliary unit AGQ1..., for UV detector QRA...

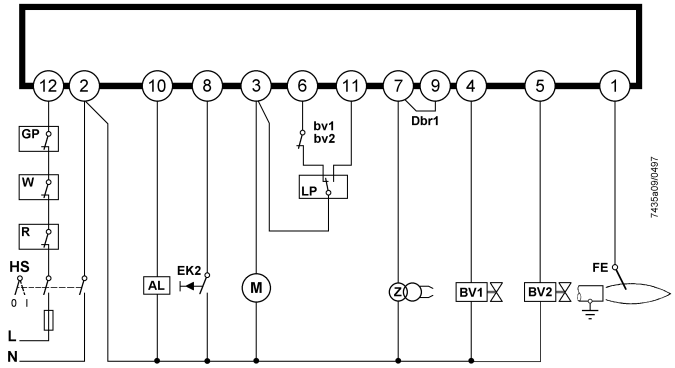

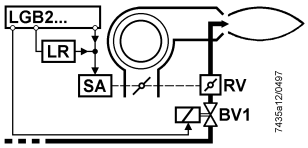

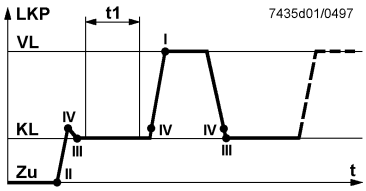

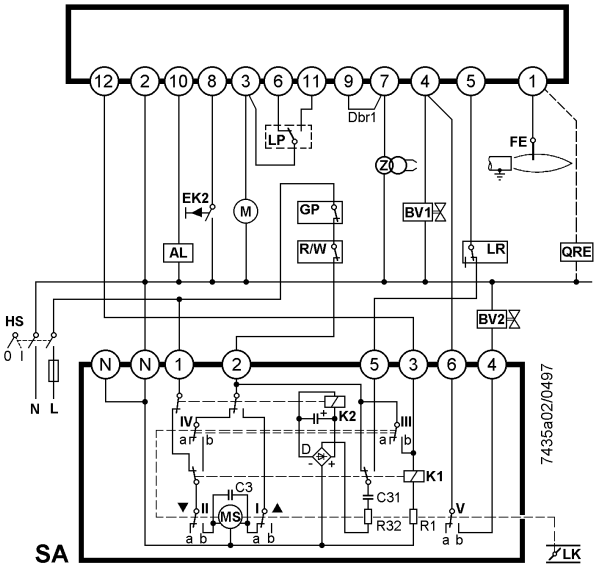

SQN91.140.../two-stage control

QRC1... with LGB3... (see above)
QRA... with auxiliary unit AGQ1... on LGB2.../LGB4... (see below)

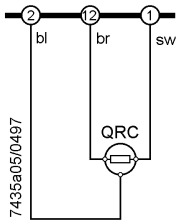

bl blue
br brown
rt red
sw black
* With LGB41... terminal 3

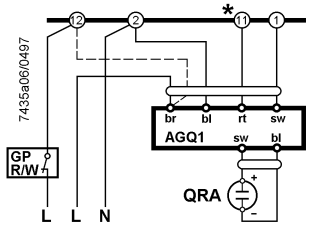

LGB22.../32...

Burner controls for single- or two-stage forced draught burners.
Air damper control for pre-purging with **high flame air volume.**

Flame supervision

LGB22...: with detector electrode or with auxiliary unit AGQ1..., UV detector QRA...
LGB32...: with blue flame detector QRC1...

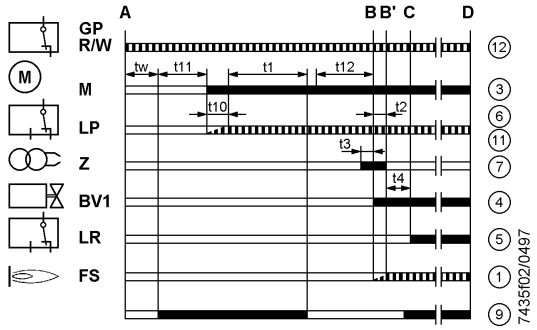

Only LGB22...

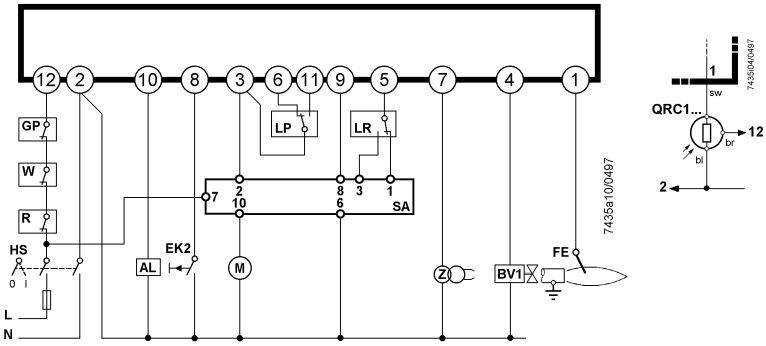

Only LGB32...

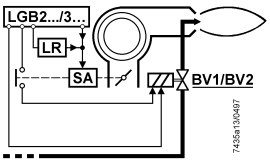

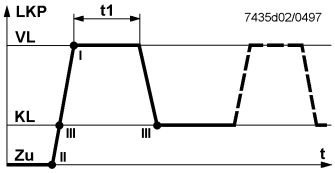

Connection examples

Air damper control of two-stage or two-stage modulating burners.
Pre-purge (t1) with rated air volume.

For detailed information about the air damper actuators, please refer to the following data sheets:

SQN30...: data sheet 7808

SQN90.../ 91...: data sheet 7806

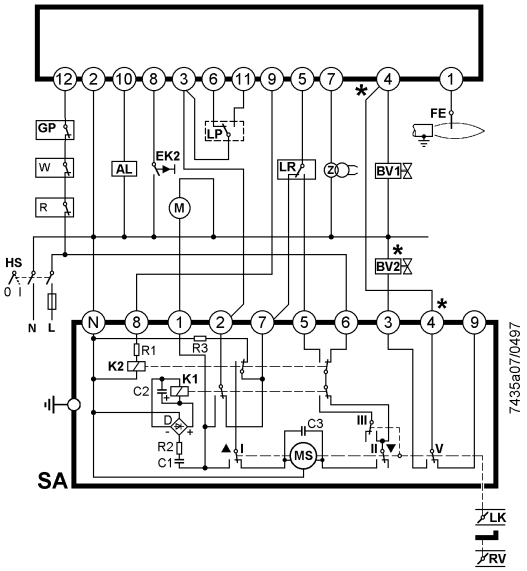

SQN3...151... or SQN3...251...
Note: in the case of two-stage modulating burners (with gas regulation damper RV), BV2 and the connection between the terminals marked (*) in the diagram are not required

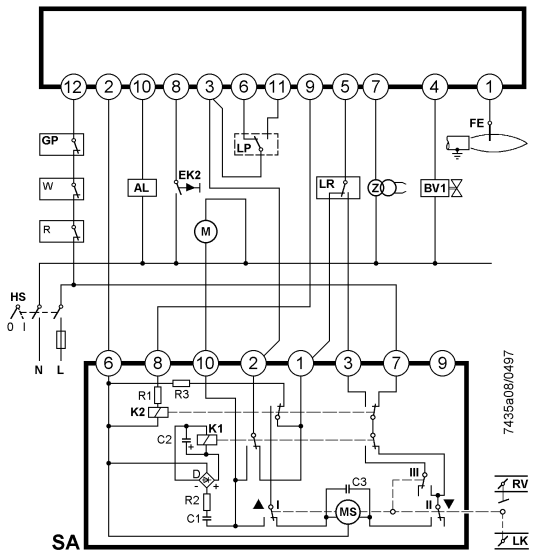

SQN90.220.../two-stage modulating control

Legend

A	Startup (controlled startup by «R»)
B-B´	Interval for flame establishment
C	Running position of burner or enabling of second stage by load controller LR
D	Controlled shutdown by «R»
tw	Waiting time
t1	Checked pre-purge time
t2	Safety time
t3	Pre-ignition time
t4	Interval BV1-BV2 / LGB22.../ 32...: Interval BV1-LR
t5	Second safety time
t10	Specified time for air pressure signal
t11	Programmed time for opening actuator SA
t12	Programmed time for closing actuator SA
▥	Required input signals
▬	Burner control output signals
zv1	Auxiliary switch in pilot gas valve
ZV1	Pilot gas valve
AL	Fault status signal (alarm)
BV	Fuel valves
bv	Auxiliary switch in the fuel valves (for closing check)
Dbr1	Wire link
Dbr2	Wire link, required if contact «bv» or «zv1» is not present
EK2	Remote reset button
FE	Detector electrode
FS	Flame signal
GP	Gas pressure monitor
HS	Mains isolator
KL	Low flame
L	Live
LKP	Air damper position
LP	Air pressure monitor
LR	Load controller
M	Fan motor
N	Neutral
R	Control thermostat or pressure controller
SA	Air damper actuator SQN...
VL	High flame
W	Thermal reset limit thermostat or safety limit thermostat
Z	Ignition transformer

LGB41...

Burner controls for atmospheric gas burners with or without auxiliary fan. **No** air damper control. Flame supervision with detector electrode.

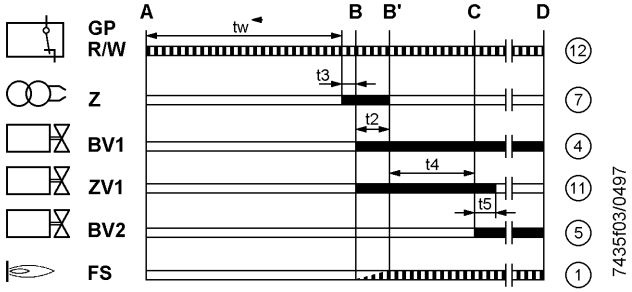

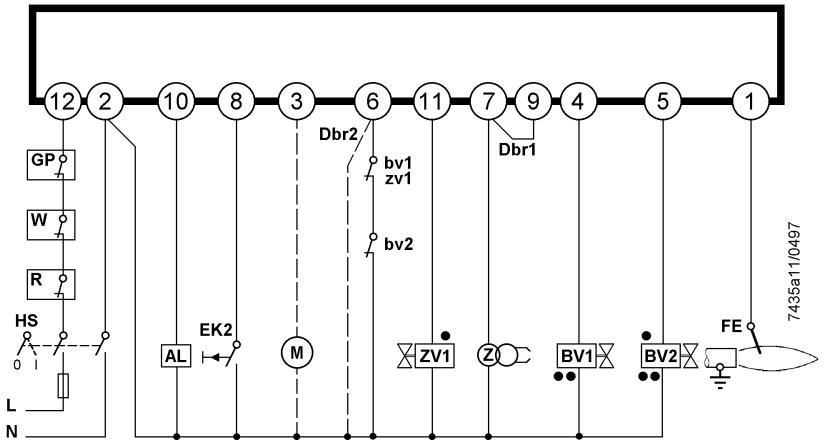

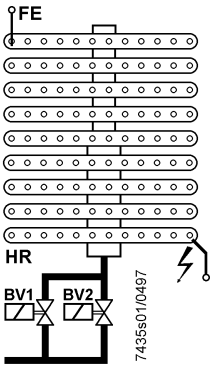

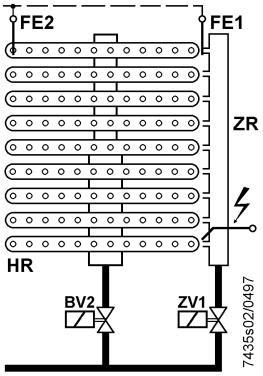

Legend

A	Startup (controlled startup by «R»)
B-B´	Interval for flame establishment
C	Running position of burner or enabling of second stage by load controller LR
D	Controlled shutdown by «R»
tw	Waiting time
t2	Safety time
t3	Pre-ignition time
t4	Interval BV1-BV2
t5	Second safety time
▭	Required input signals
■	Burner control output signals
•	Connection of valves in the case of pilot burners with main flame supervision
••	Connection of valves in the case of two-stage atmospheric burners with supervision of the first stage (BV1)

AL	Fault status signal (alarm)
BV	Fuel valves
bv	Auxiliary switch in the fuel valves (for closing check)
Dbr1	Wire link
Dbr2	Wire link, required if contacts «bv» or «zv1» are not present
EK2	Remote reset button
FE	Detector electrode
FS	Flame signal
HR	Main burner
HS	Mains isolator
L	Live
M	(Auxiliary) fan motor
N	Neutral
R	Control thermostat or pressure controller
W	Thermal reset limit thermostat or safety limit thermostat
Z	Ignition transformer
ZR	Pilot burner
ZV1	Pilot gas valve
zv1	Auxiliary switch in pilot gas valve

Notes on the electrical installation of burner controls LGB...

To isolate the burner control from the mains network, an all-polar isolator with a contact gap of at least 3 mm is required.

Switches, fuses, earthing, etc., must be in compliance with local standards and regulations.

Protection against electric shock hazard on the burner control and on all associated electrical items must be ensured by appropriate mounting.

The earthing lug in the terminal base must be secured with a metric screw and a lock washer or similar.

The connection diagrams shown apply to burner controls with earthed neutral. In the case of ionization current supervision in networks with **non-**earthed neutral, terminal 2 must be connected to the earth conductor via an RC unit.
Part no. of RC unit: ARC 4 668 9066 0

The maximum permissible switching capacity of the connection terminals must not be exceeded.

From externally, no mains voltage may be fed to the burner control´s control outputs. This means that when checking the functioning of devices controlled by the burner control (gas valves or similar), the burner control may **never** be plugged in.

In the case of burners with no fan motor, an AGK25.00A27 (230 V) **or AGK25.00A17** (110 V) **must be connected to terminal 3 of the burner control, or else, the burner cannot be started.**

For safety reasons, it is absolutely essential to feed the neutral wire to the neutral distributor in the plug-in base or to terminal 2 and from there to the different units (fan, ignition transformer and gas valves), or to an external neutral distributor.

Correct connection via the neutral distributor of the plug-in base:

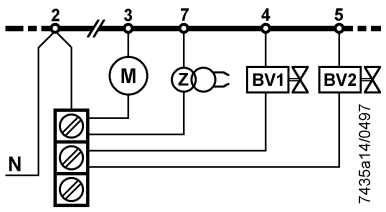

Caution! Do not open the burner control!
Burner controls are safety devices.
Any unauthorized interference can result in unforeseen detrimental consequences!

Functions

LGB21...

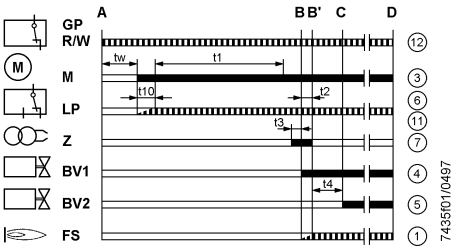

LGB22.../ 32...

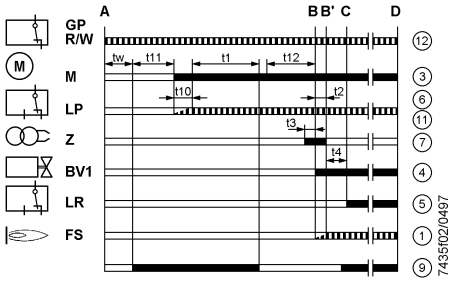

LGB41...

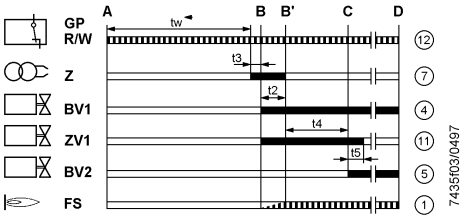

The function diagrams show the required or permissible input signals for the control part and the flame supervision circuit hatched. If these input signals are not present, the burner control will interrupt the startup sequence and initiate lockout where this is required by safety regulations.

The LGB... are capable of detecting **undervoltages**. This means that load relay AR will be de-energized if the mains voltage falls below 160 V (for nominal 220...240 V) or 75 V (for nominal 100...110 V). The burner control will automatically attempt a restart when the supply voltage again exceeds 160 V or 75 V respectively.

Conditions for burner startup

- Burner must be reset
- The contacts of the gas pressure monitor «GP», of the thermal reset limit thermostat or pressure monitor «W» and of the control thermostat or controller «R» must be closed
- Fan motor must be connected
- Air pressure monitor must be in the idle position

Startup program

A-C Startup program

A **Start command** (controlled startup)
This command is initiated by «R». Terminal 12 receives voltage and the programming mechanism starts. After the waiting time «tw» with the LGB21... has lapsed and after the actuator SA has driven the air damper to the high flame position (that is, on completion of «t11») with the LGB22.../32..., the fan motor will be started.

tw **Waiting time**
During this period of time, the air pressure monitor and the flame relay are tested for correct contact positions.

t11 **Programmed opening time for actuator SA**
(Only with LGB22.../ 32...): the fan motor is started only after the air damper has reached the high flame position.

t10 **Specified time for air pressure signal**
On completion of this period of time, the set value of air pressure must have built up, or else lockout will be initiated.

t1 **Pre-purge time**
Purging the combustion chamber and the secondary heating surfaces: with low flame air volume with the LGB21... and with high flame air volume (rated air volume) with the **LGB22.../ 32...** The «Type summary», and the functional and programming mechanism diagrams show the so-called **checked pre-purge time t1**, during which the «LP» must indicate that the required air pressure has built up. The effective pre-purge time comprises the interval end of «tw» / start of «t3».

t12 **Programmed closing time for actuator SA**
(Only with LGB22.../ 32...): during «t12», the air damper travels to the low flame position.

t3n **Post-ignition time**
Ignition time during the safety time. Just before reaching the end of the safety time «t2», the ignition transformer is switched off. This means that the ignition time «t3n» is somewhat shorter than the safety time «t2». This is necessary in order to give the forcedly closed flame relay sufficient time to drop out if there is no flame.

t3 **Pre-ignition time**
During this period of time and up to the end of the safety time «t2», the flame relay is forced to close. On completion of «t3», fuel release is initiated at terminal 4 or at terminal 11 of the LGB41...

t2 **Safety time**
On completion of «t2», there must be a flame signal at input 1 of the flame signal amplifier, which must be continuously present until controlled shutdown occurs, or else the flame relay will be de-energized, the burner control will initiate lockout and remain locked in the fault position.

t4 **Interval**
LGB21...: time to the release of the second fuel valve
LGB22.../32...: on completion «t4», the heat generating equipment is controlled in function of the load (enabling of load controller)
LGB41...: time to the release of the second fuel valve

t5 Only LGB41...:
Second safety time for pilot burners with main flame supervision equipped with a pilot gas valve «ZV1».

B-B´ **Interval for flame establishment**

C **Running position of burner reached**

C-D **Burner operation** (heat generation)
High flame operation or, in connection with a load controller, partial load.

D **Controlled shutdown by «R»**
The burner is immediately shut down and the programming mechanism is ready for a new start.

Control program in the event of faults

Basically, if there is a fault, the fuel supply is immediately shut down. If the fault condition occurs at a time between start and pre-ignition, which is not indicated by symbols, the cause is usually the air pressure monitor «LP» shutting down, or a premature (that is, faulty) flame signal.

- **After a mains voltage failure or in the event of undervoltage:** startup repetition with unabridged program
- **In the event of a premature flame signal** from the start of the pre-purge time: immediate lockout
- **In the event the contacts** of the air pressure monitor «LP» have welded during «tw»: no start
- **If there is no air pressure signal:** lockout on completion of «t10»
- **In the event of an air pressure failure** on completion of «t10»: immediate lockout
- **If the burner does not ignite:** lockout on completion of «t2»
- **If flame is lost during operation:** immediate lockout

Resetting the burner control

The burner control can **immediately** be reset after each lockout.

Lockout and control program indicator

Burner control

The position of the programming mechanism can be viewed through the window on the front of the burner control. In the event of a fault, the program mechanism is stopped and thus the lockout indicator also. The symbol visible on the cam indicates both the position in the program sequence and the type of fault according to the following legend:

◀	No start because the start control loop is interrupted
||||	Interval «tw» or «t10» (LGB21...) Interval «tw» or «t11» (LGB22.../ 32...) Interval «tw», «t3» or «t2» (LGB41...)
▲	Air damper fully open (LGB22.../ 32...)
P	Lockout due to absence of air pressure signal
←←←	Interval «t1», «t3» and «t2» (LGB21...) Interval «t1», «t3» («t12») (LGB22.../ 32...)
▼	Release of fuel
1	Lockout because there was no flame signal on completion of the first safety time
2	Enabling of second fuel valve (LGB41...) Enabling of load controller (LGB22.../ 32...)
3	Lockout because there was no flame signal on completion of the second safety time (LGB41...)
----	Low or high flame operation (or return to the running position)

Mechanical design

The burner controls are of plug-in design and very compact (measuring only 91 x 62 x 63 mm, including the base). The housing is made of impact-proof, heat-resistant plastic and accommodates

– the programming mechanism with the synchronous motor
– the electronic flame signal amplifier with the flame relay and the other switching devices
– the splashwater-proof lockout reset button with integrated fault indication lamp

The **plug-in base** is also made of impact-proof and heat-resistant plastic and can be supplied either with screw terminals or clip connectors. The cable is introduced either from the front or the side using the cable gland holder AGK65... or the cable holder AGK66... . It can also be introduced from the bottom.

The two narrow sides of the base are provided with catches which engage in the housing when the latter is plugged in. To disengage, a screwdriver must be slightly tilted in the appropriate guiding slots.

Length and width of the base and location of the fixing holes and the lockout reset button are identical with those of the predecessor units LFM... and LFI7... .

Ordering

Burner control (without base) — refer to «Type summary»

Flame detectors
- Ionization current detector electrode — delivered by others
- UV detector QRA... — see data sheet 7714
- Blue flame detector QRC1... — see data sheet 7716

RC unit for supervision of ionization current in networks with **non-**earthed neutral — **ARC 4 668 9066 0**

PTC resistor to generate load on terminal 3 — **AGK25.00A27** (230 V)
(compulsory with burners with no fan motor connected to terminal 3) — **AGK25.00A17** (110 V)

Auxiliary unit for UV supervision
can be fitted under the LGB... plug-in base, height 27.5 mm
- **AGQ1.1A27** (cable length 500 mm)
- **AGQ1.2A27** (cable length 300 mm)

Plug-in base, without cable gland and cable holder.
2 holes of 16.2 mm dia. for cable entry from below
- With screw terminals — **AGK11**
- For clip connectors — **AGK12**

Clips
- Separately, 100 pieces each — **AGK 4 408 5625 0**
- On straps, 10,000 pieces each — **AGK 4 408 5626 0**

Mounting / removal tool
- Mounting tool — **KF8883**
- Removal tool — **KF8884**

Cable gland holder, for 5 x Pg11, can be pushed into the base — **AGK65**

Cable holder, can be pushed into the base, with 6 knockout cable entries (without cable tension relief) of which there is 1 x 8.8/17 mm dia., entry on the side and 3 x 7 mm dia. and one rectangular opening 6 x 20 mm on the front — **AGK66**

Pedestal (empty housing) for increasing the height of the LGB... (62.5 mm) to that of the LFM... or LFI7... (90 mm) — **AGK21**

Service adapter with signal lamps for functional check, detector current measurement, etc., of the burner control — **KF8872**

Test case for checking the functions of the burner control — **KF8843**

Adapters / replacement types for LFI7..., LFM1... and LFD...
(No rewiring required)

LGB21... with adapter	KF8852 KF8880 KF8880 KF8857	LFI7... LFM1... LFM1...-F LFD1...
LGB22... with adapter	KF8853-K KF8880	LFI7... LFM1...
LGB41... with adapter	KF8862 KF8858	LFM1... LFD2.35

Flame supervision with detector electrode

The conductivity and the rectifying effect of hot flame gases are used for flame supervision. For this purpose, an AC voltage is applied to the heat-resistant detector electrode which projects into the flame. The current which flows in the presence of a flame (ionization current) produces the flame signal for the input of the flame signal amplifier. The amplifier is designed such that it responds only to the **DC current component** of the flame signal, thereby ensuring that no short-circuit can be simulated between detector electrode and earth (since in that case an AC current would flow).

Basically, the flame supervision circuit is insensitive to adverse effects of the ignition spark on the ionization current.

However, should these effects exceed a certain level, the electrical connections on the primary side of the ignition transformer must be changed and / or the siting of the ignition electrode against the ionization electrode is to be checked.

Ionization current supervision with 110 V burner controls

Since the ionization current with 110 V burner controls is only about 50 % of that with 220 V burner controls, it is sometimes necessary to increase it by means of a transformer. Capacity of transformer: 2 VA min.; ratio approx. 1.1...1.5; primary and secondary windings galvanically separated.

Connection of transformer

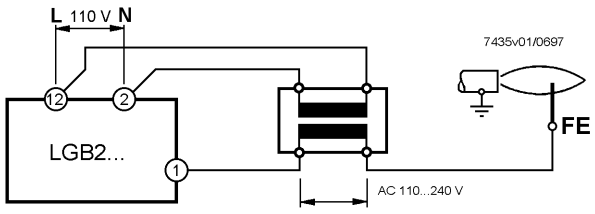

Technical data

Burner control

Mains voltage	230 V -15 %/+10 % (LGB32...!)
	100 V -15 %...110 V +10 %
Input current to terminal 12	5 A [1]) max.
Perm. loading on terminals	
- Terminal 3	3 A max.
	(15 A during 0.5 s max.)
- Terminal 4, 5, 7	2 A max.
- Terminal 10	1 A max.
- Terminal 12 (at Umax. 264 V)	5 A max.
Lenght of cable terminal 8 and terminal 10	20 m

Mains frequency	50 Hz -6 %...60 Hz +6 %
Power consumption	3 VA
Radio interference protection	N to VDE0875
Primary fuse	10 A max., slow
Degree of protection	IP40
Mounting position	optional
Weight, without/with base	approx. 230/310 g
Weight AGK65... or AGK66...	approx. 12 g

Identification code to EN298

LGB21.../ 22...F T L L X N
with two-stage operation

LGB32... F M L L X N
with two-stage operation

LGB41... A B L L X N
with two-stage operation
(BV1+BV2 or ZBV+BV2)

A M L L X N
with single-stage operation

Environmental conditions	
- Transport	IEC721-3-2
Climatic conditions	class 2K2
Temperature	-50...+60 °C
Humidity	< 95 % r.h.
Mechanical conditions	class 2M2
- Operation	IEC721-3-3
Climatic conditions	class 3K5
Temperature	-20...+60 °C
Humidity	< 95 % r.h.

CE conformance	
According to the directives of the European Community	
Electromagnetic compatibility EMC	89/336 EEC includ. 92/31 EEC
Gas appliance directive	90/396 EEC
Emissions	EN 50081-1
Immunity	EN 50082-2

Condensation, formation of ice and ingress of water are not permitted.

Flame supervision with blue flame detector QRC1...

The QRC1... has been designed specifically for blue burning flames. Light incidence is from the front or the side. The detector is secured by means of a soft plastic plug. Connection is made with a 3-wire cable (pre-amplifier integrated in the detector casing). For design features and application, refer to data sheet 7716.

Operating voltage	230 V ±10 %, 50 Hz	Power consumption	0.35 VA
Perm. detector current during pre-purge time (dark current)	5 µA	Length of detector cable	see data sheet 7716
		Degree of protection	IP40
Min. detector current required during operation	50 µA	Perm. ambient temperature	-20...+60 °C (short-time 60 s max., 75 °C max.)
Weight (includ. 350 mm cable)	29 g		

Measurement circuit with blue flame detector QRC1...

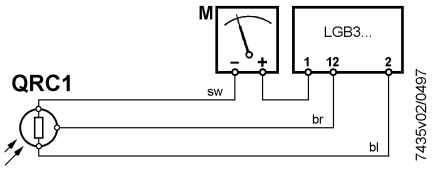

M microammeter Ri 5000 Ω max.
bl blue wire
br brown wire
sw black wire

Flame supervision with UV detector QRA... and auxiliary unit AGQ... for LGB21.../ 22.../ 41...

UV detector QRA...

Flame detector for universal use with gas and gas / oil burners. Light incedence from the front or the side, total length 97 mm, available with normal or, as QRA2M, increased sensitivity. Secured by means of a flange and clamp. Also available as a metal-encapsulated version in the form of the QRA10.... For details, please refer to data sheet 7712.

Auxiliary unit AGQ...

When used in connection with burner controls LGB..., a special UV auxiliary unit AGQ... is required. This unit is connected to the mains via two cables and to the burner control via terminals 1, 2 and 11. There are two possibilities to check the arc-through tendency of aging cells and the UV light, depending on the way the AGQ... is connected (refer to connection diagram below):

A Operation with permanent phase
UV test by doubling the supply voltage (2 x UN = AC 460 V) across the UV cell on startup (that is, until terminal 11 receives voltage) and after the controlled shutdown.

B Operation with controlled phase
UV test by doubling the supply voltage on startup only, that is, during the interval between controlled startup and air pressure signal. After a controlled shutdown, there is no voltage across the UV cell. Since in that case an aged UV cell could regenerate and the quench test would be eliminated, this version does not represent a valid substitute for the above described operation «A» with permanent phase.

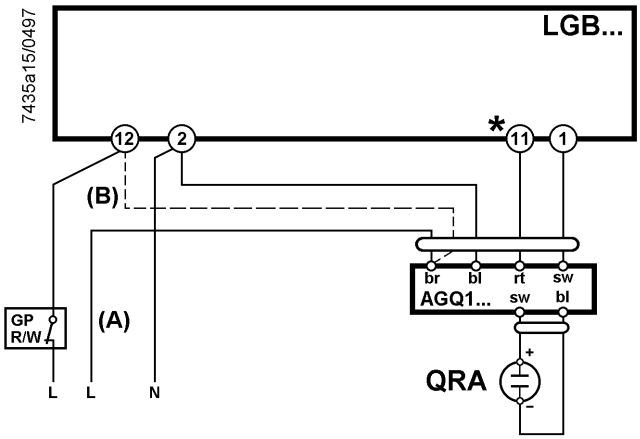

AGQ1.1A27
AGQ1.2A27

A Operation with permanent phase
B Operation with controlled phase
* With LGB41...: terminal 3

Technical data

Mains voltage	220 V -15 %...240 V +10 %	Mains frequency	50 Hz -6 %...60 Hz +6 %
Power consumption	4.5 VA	Radio interference protection	N to VDE0875
Degree of protection	IP40	Mounting prosition	optional

Perm. ambient temperatures		Weight	approx. 140 g
- During operation	-20...+60 °C	- QRA2...; QRA2M...	60 g
- During transport and storage	-40...+70 °C	- QRA10..., QRA10M...	450 g

Max. perm. lenght of detector cable (use separate cable for connecting the UV detector QRA... to the AGQ1...)	20 m	Max. perm. length of connecting cable AGQ1... to LGB...	20 m

Detector voltage with no load on the QRA...	at mains voltage UN: 220 V	240 V
- Up to the end of «t10» and after controlled shutdown	DC 620 V	DC 675 V
- From the start of «t1»	DC 300 V	DC 300 V
Detector voltage (load by DC measuring instrument, Ri > 10 MΩ)		
- Up to the end of «t10» and after controlled shutdown	DC 500 V	DC 550 V
- From the start of «t1»	DC 280 V	DC 280 V
DC current detector signals with UV detector QRA...		
- a: measurement on LGB...	3 µA	15 µA
- b: measurement on UV detector	200 µA	500 µA

Measurement circuit with UV detector QRA... and auxiliary unit AGQ1...

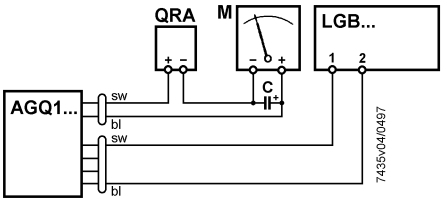

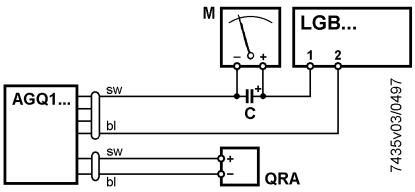

C	electrolytic capacitor 100...470 µF; DC 10...25 V
M	microammeter Ri 5000 Ω max.
bl	blue
gr	grey
sw	black

Electrical connection of ionization current and UV detectors

It is important that signal transmission will take place with the smallest possible losses:

- With both ionization current and UV supervision, the length of cable for flame detection may not exceed **20 m**
- With both ionization current and UV supervision, the detector cable may not be run together with other conductors in the same cable since line capacitances reduce the magnitude of the flame signal
- The insulation resistance between detector electrode and ground must be at least 50 MΩ, even after an extensive number of operating hours. Prerequisite for this is not only a high-quality heat-resistant insulation of the electrode cable, but also of the detector electrode itself (ceramic holder)
- A dirty detector electrode holder offers favourable conditions for surface leakage currents which reduce the magnitude of the flame signal
- The burner (as the counter-electode) must be correctly earthed, or else no ionization current will flow
- Earthing of the boiler alone does not suffice!
- The line, neutral and central point conductors may not be incorrectly connected to terminals 2 and 12 of the burner control, or else there will be no flame signal!

  For electrical connection of blue flame detector QRC1..., please refer to data sheet 7716.

Warnings

- **To protect the burner control from electric overload, both ignition and ionization electrode must be located such that arcing over of the ignition spark to the ionization electrode cannot occur!**
- **In the geographical areas where DIN standards are in use, the installatien must be in compliance with VDE requirements, particularly with the standards DIN/VDE0100 and 0722!**
- **Condensation and ingress of humidity must be avoided!**
- **Ignition cables must always be laid separately, maintaining the greatest possible distance to the unit and other cables!**
- **Observe the notes on the laying of detector cables (refer to «Technical data»!**
- **The electrical wiring must be made in compliance with national and local standards and regulations!**
- **LGB... are safety devices. It is therefore not permitted to open, interfere with or modify the units!**
- **Check wiring carefully before putting the unit into operation!**
- **The unit must be completely isolated from the mains before performing any work in the electronic connection area of the LGB...!**
- **Check all safety functions when putting the unit into operation or after changing a fuse!**
- **Ensure protection against electric shock hazard on the unit and at all electrical connections by appropriate mounting!**
- **Electromagnetic emissions must be checked from an application point of view!**
- **All regulations and standards applicable to the particular application must be observed!**
- **Installation and commissioning work must always be carried out by qualified personnel!**
- **The LGB... and this data sheet are intended for use by OEMs that integrate the LGB... in their products!**

Internal diagram and time diagram of programming mechanisms

LGB21...

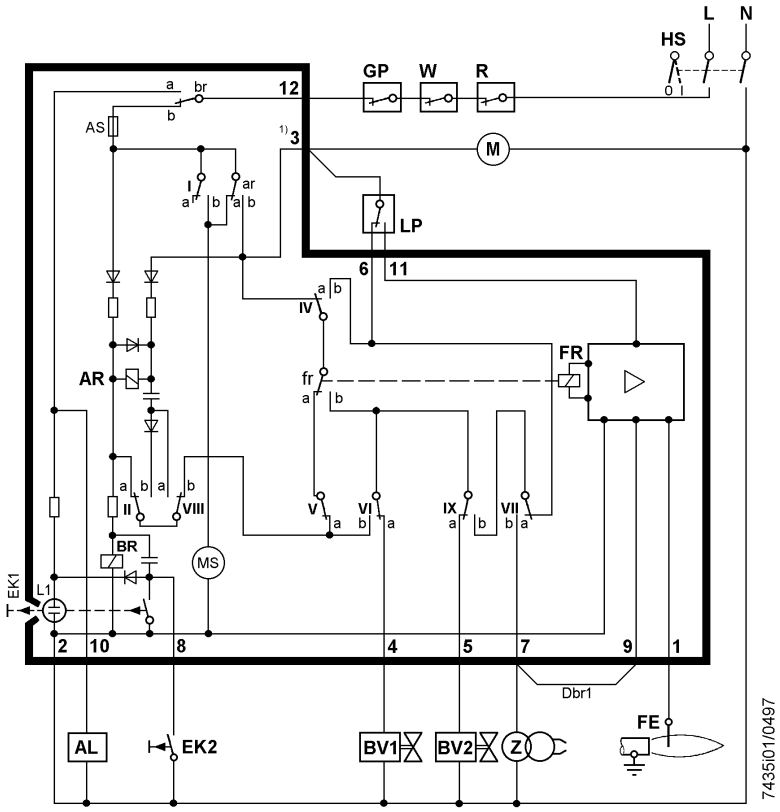

Legend

AL	Fault status signal (alarm)	L	Live
AR	Load relay with contact «ar»	L1	Lockout warning lamp
BR	Lockout relay with contact «br»	LP	Air pressure monitor
BV	Fuel valves	M	Fan motor
Dbr1	Wire link	MS	Synchronous motor
EK	Lockout reset button	N	Neutral
FE	Detector electrode	R	Controle thermostat or pressure controller
FR	Flame relay	W	Thermal reset limit thermostat or pressure monitor
GP	Gas pressure monitor		
HS	Mains isolator	Z	Ignition transformer

1) The resistance between terminal 3 and N may not exceed 1.6 kΩ max.

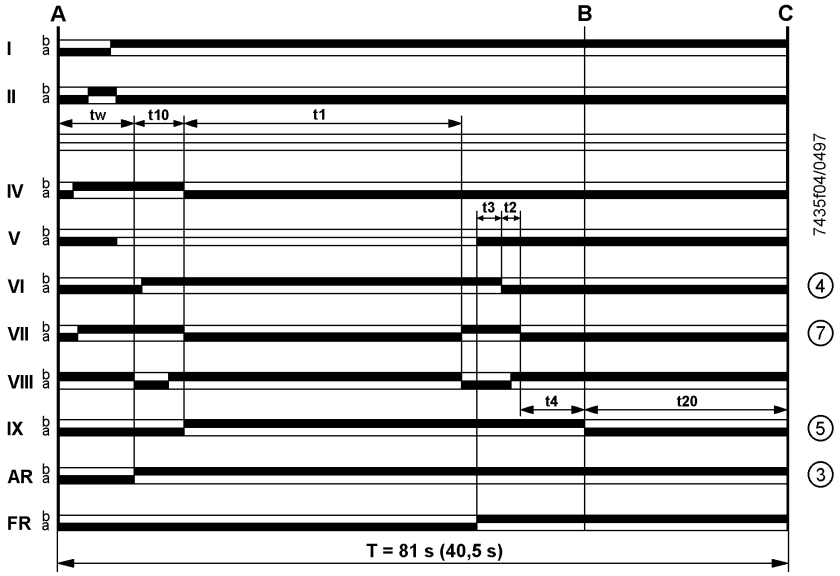

Legend for diagram of programming mechanism

A	Start position (controlled startup)	t2	Safety time
AR	Load relay	t3	Pre-ignition time
B	Running position of burner	t4	Interval BV1-BV2
C	Running position of programming mechanism or start position	t10	Specified time for air pressure signal
FR	Flame relay	t20	Interval up to self-shutdown of programming mechanism
tw	Waiting time	T	Total running time of programming mechanism
t1	Checked pre-purge time		
I...IX	Cam switches		

Only LGB22...

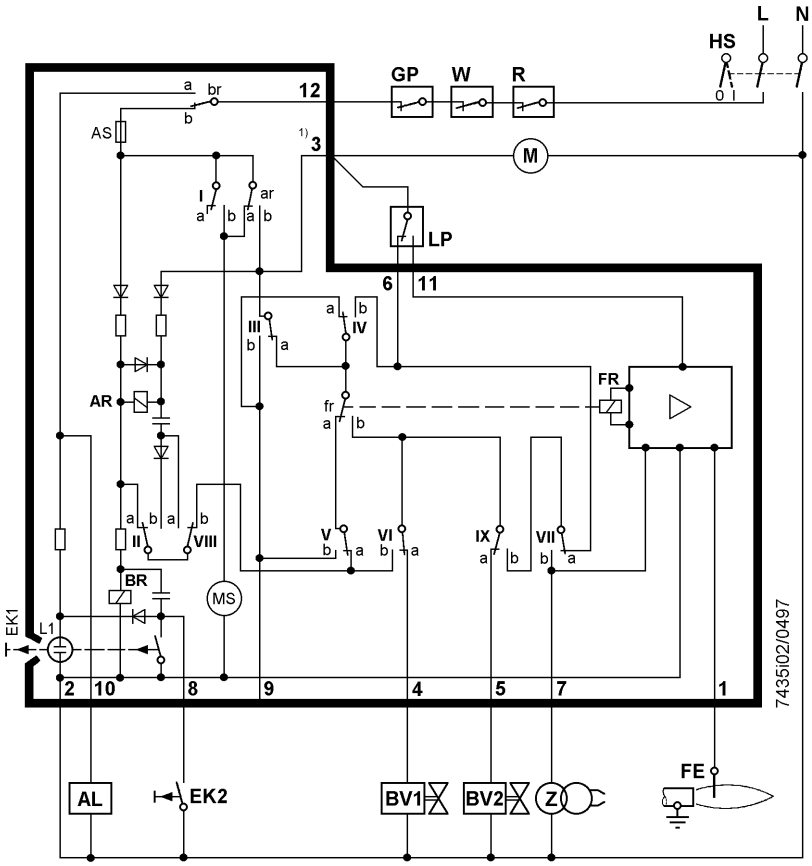

Only LGB32...

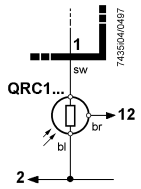

Legend

AL	Fault status signal (alarm)	L	Live
AR	Load relay with contact «ar»	L1	Lockout warning lamp
BR	Lockout relay with contact «br»	LP	Air pressure monitor
BV	Fuel valves	M	Fan motor
EK	Lockout reset button	MS	Synchronous motor
FE	Detector electrode	N	Neutral
FR	Flame relay	R	Control thermostat or pressure controller
GP	Gas pressure monitor	W	Thermal reset limit thermostat or pressure monitor
HS	Mains isolator	Z	Ignition transformer

1) The resistance between terminal 3 and N may not exceed 1.6 kΩ max.

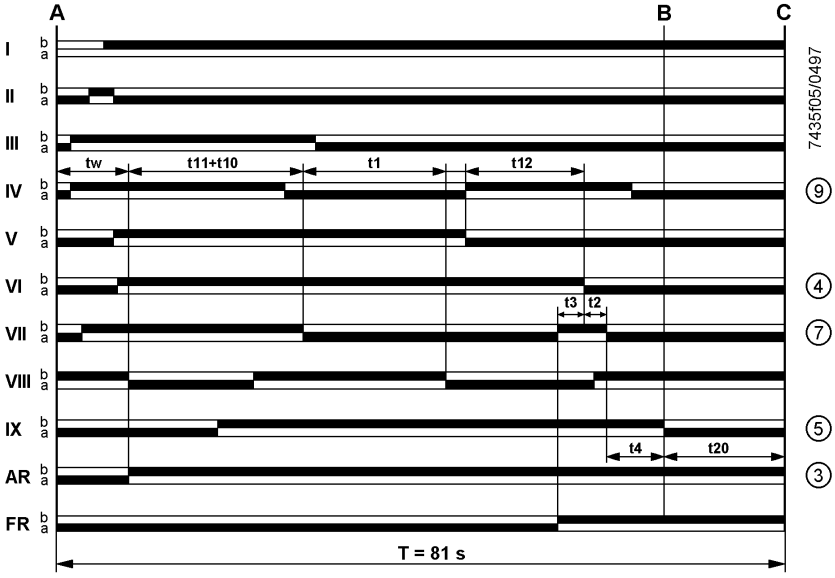

Legend for diagram of programming mechanism

A	Start position (controlled startup)	t2	Safety time
AR	Load relay	t3	Pre-ignition time
B	Running position of burner	t4	Interval BV1-BV2 or BV1-LR
C	Running position of programming mechanism or start position	t10	Specified time for air pressure signal
FR	Flame relay	t11	Programmed time to open the damper SA
tw	Waiting time	t12	Programmed time to close the damper SA
t1	Checked pre-purge time	t20	Interval up to self-shutdown of programming mechanism
I...IX	Cam switches	T	Total running time of programming mechanism

LGB41...

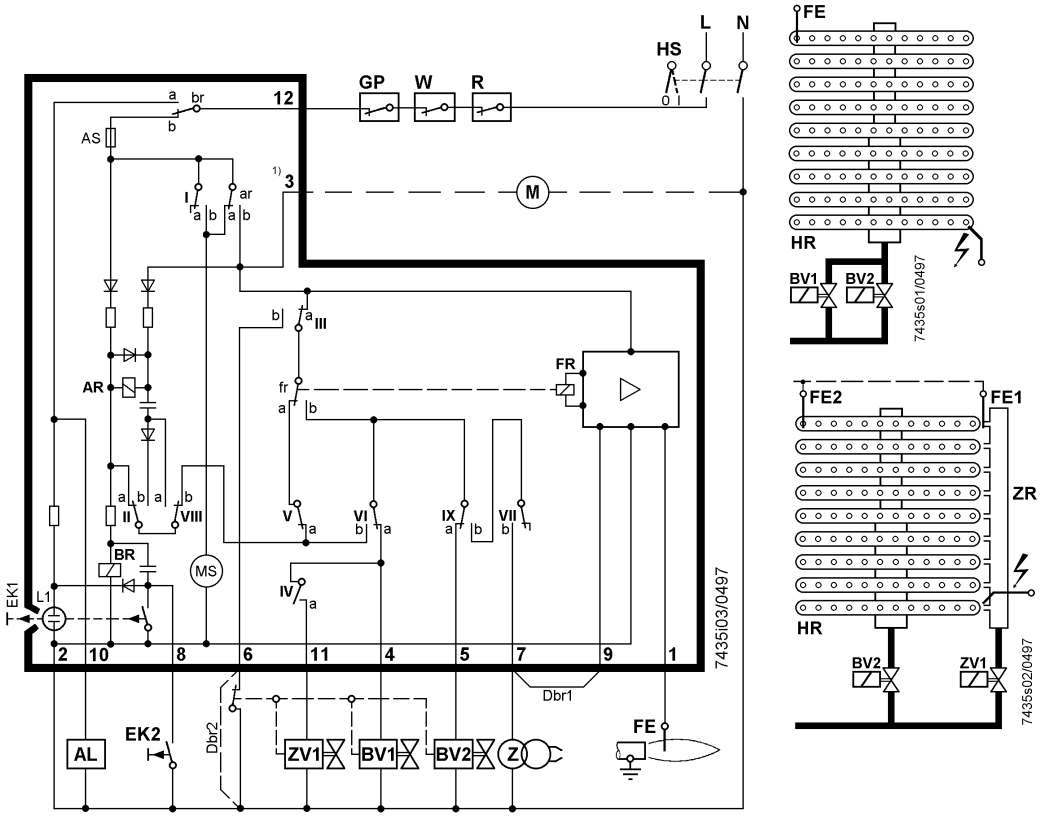

Legend

AL	Fault status signal (alarm)	L	Live
AR	Load relay with contact «ar»	L1	Lockout warning lamp
BR	Lockout relay with contact «br»	M	Fan motor
BV	Fuel valves	MS	Synchronous motor
Dbr1	Wire link	N	Neutral
Dbr2	Wire link terminals 6-2 required when contacts «bv» or «zv1» are not present	R	Control thermostat or pressure controller
EK	Lockout reset button	W	Thermal reset limit thermostat or pressure monitor
FE	Detector electrode	Z	Ignition transformer
FR	Flame relay	ZR	Pilot burner
GP	Gas pressure monitor	ZV1	Pilot gas valve in place of BV1 in case of pilot burners with main flame supervision
HR	Main burner		
HS	Mains isolator		

1) The resistance between terminal 3 and N may not exceed 1.6 kΩ max.

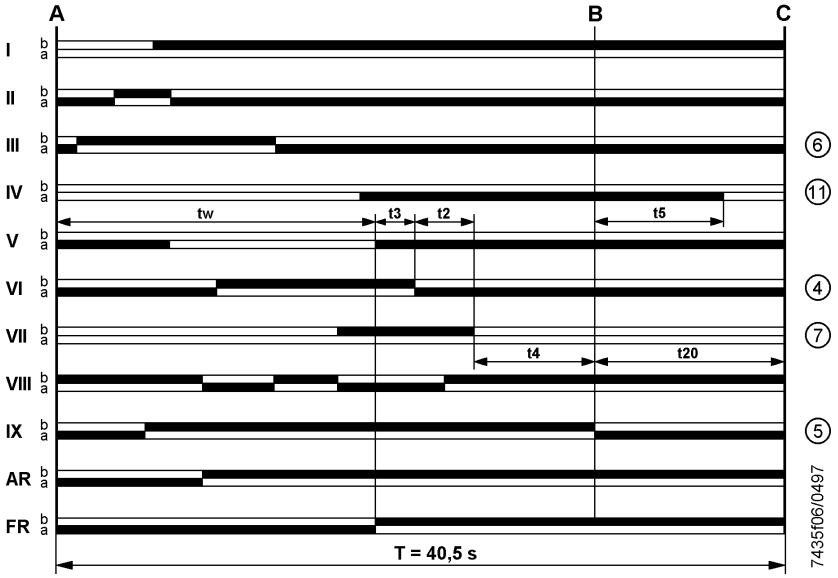

Legend for diagram of programming mechanism

A	Start position (controlled startup)	t2	Safety time
AR	Load relay	t3	Pre-ignition time
B	Running position of burner	t4	Interval BV1-BV2
C	Running position of programming mechanism or start position	t5	Second safety time
FR	Flame relay	t20	Interval up to self-shutdown of programming mechanism
tw	Waiting time	T	Total running time of programming mechanism
I...IX	Cam switches		

Dimensions
Burner control

Burner control with base **AGK11...** and cable gland holder **AGK65...,** (can be pushed into the base)

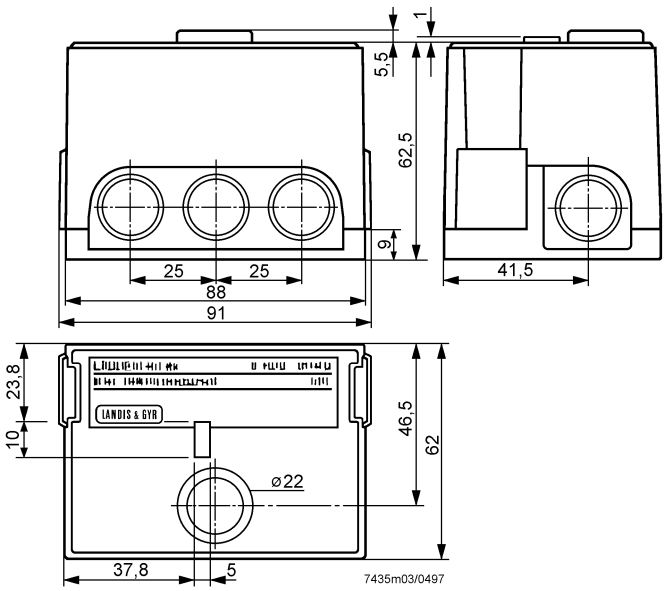

Base

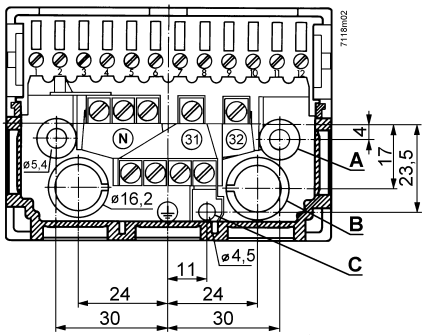

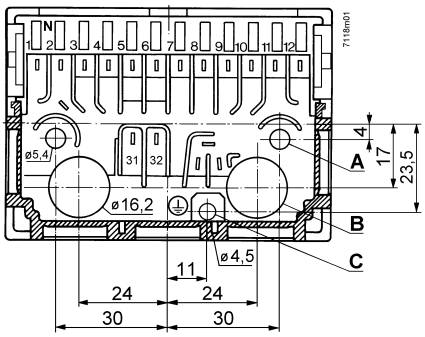

AGK11...
Plug-in base with screw terminals.
Hatched: position of cable gland holder or cable holder, can be pushed into the base.
«B»: holes for cable entry.
«31», «32»: auxiliary terminals.
«N»: neutral terminals, connected to neutral input (terminal 2).

Bottom: 4 earth terminals, joining a lug for earthing the burner.

AGK12...
Plug-in base for clip connections.
Hatched: position of cable gland holder or cable holder, can be pushed into the base.
«B»: holes for cable entry from below.

Connection choices:

1,3 a. 4 each	4 clips max.	Earthing: total of 6 clips, connected to lug «C» for earthing the burner
2	8 clips max.	
5 through 10	3 clips max.	
11, 12 each	4 clips max.	
31, 32 each	2 clips max.	

Mandatory: (AGK11... and AGK12...)
Connection of earthing lug «C» **and** of fixing screws in «A» to the ground of the burner (using a metric screw with lockwasher or similar!)

UV auxiliary unit AGQ1...

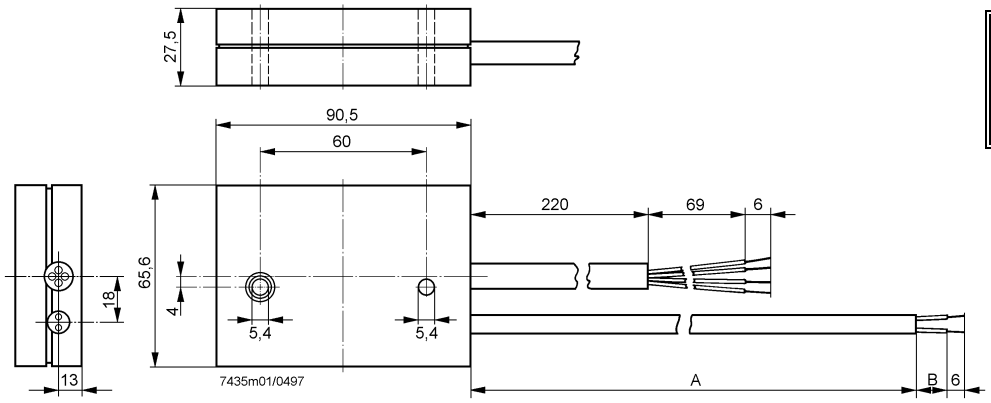

Type reference	Dimension	
	A	B
AGQ1.1A27	500	19
AGQ1.2A27	300	34